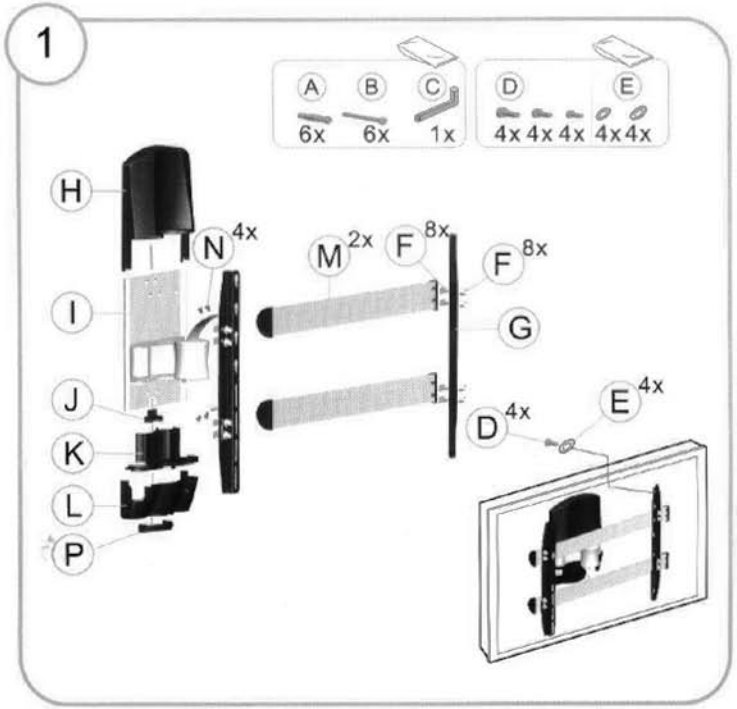

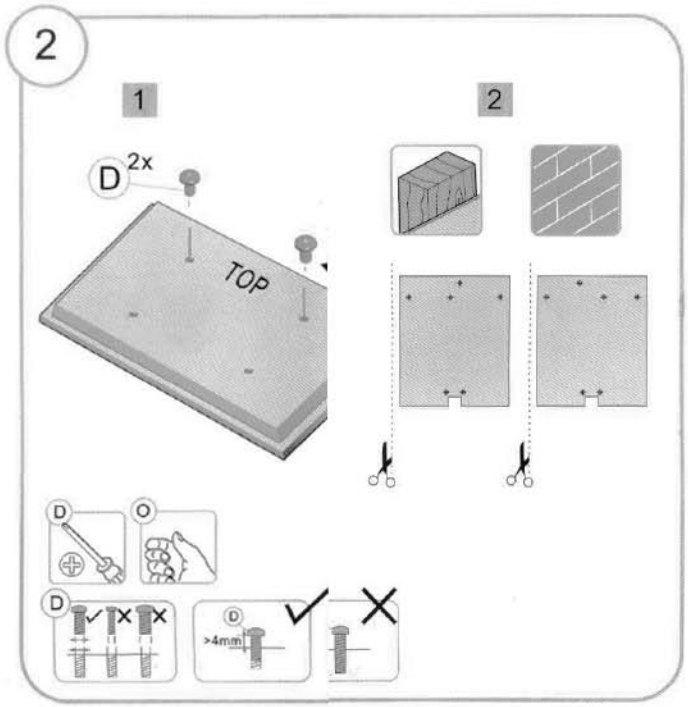

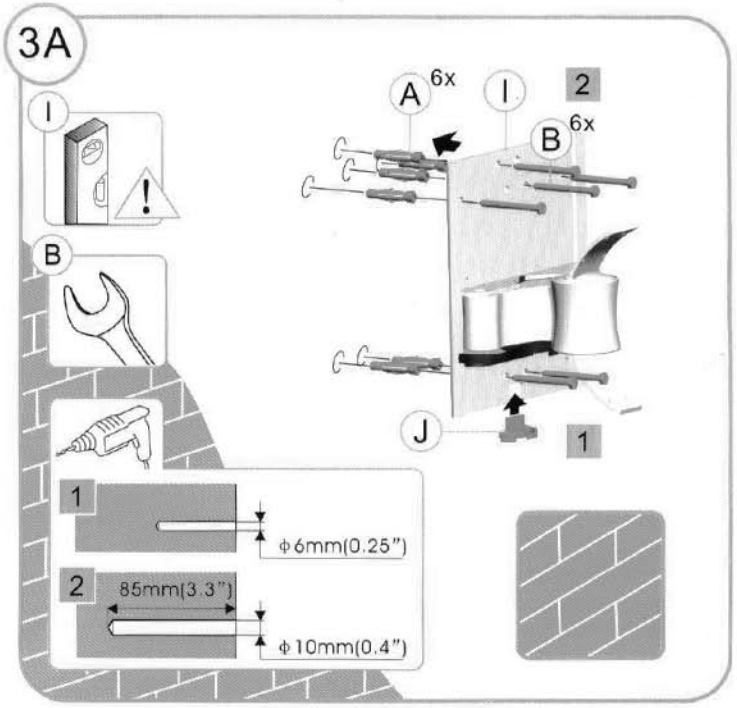

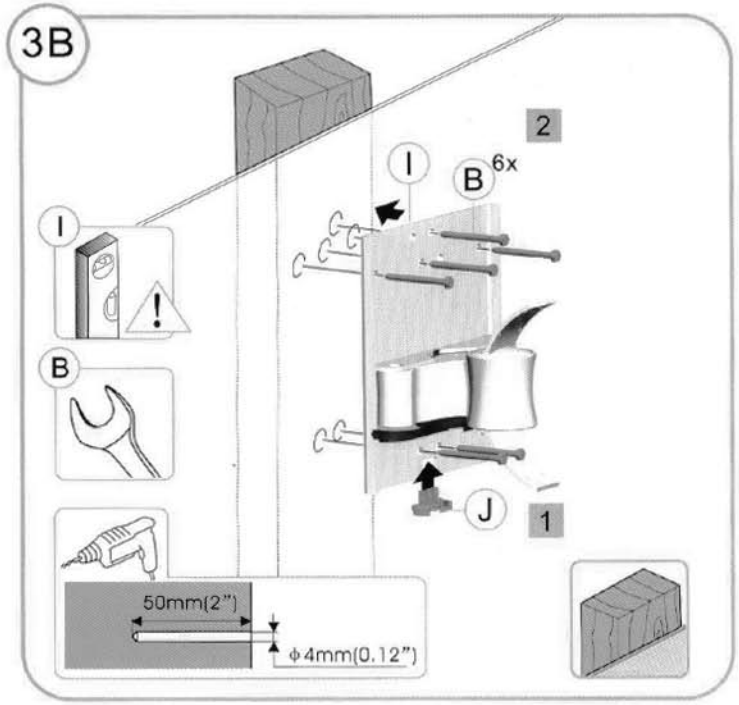

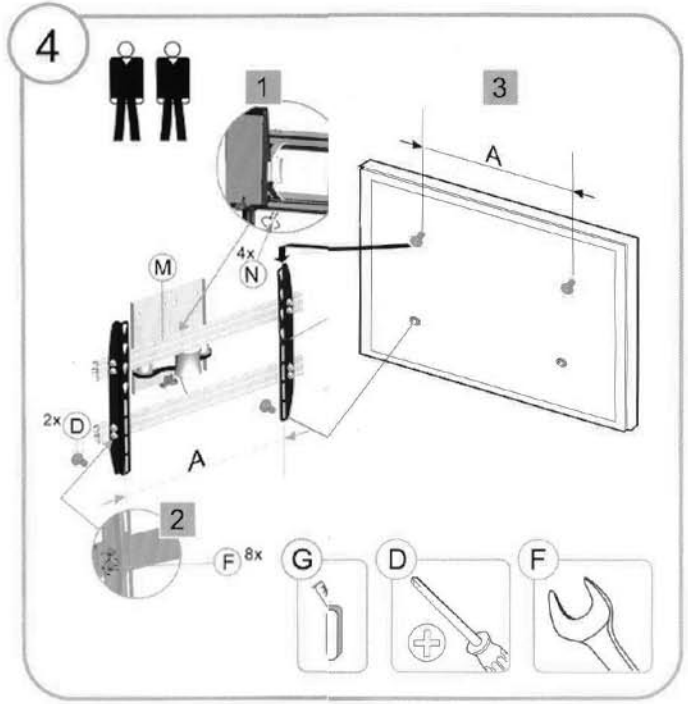

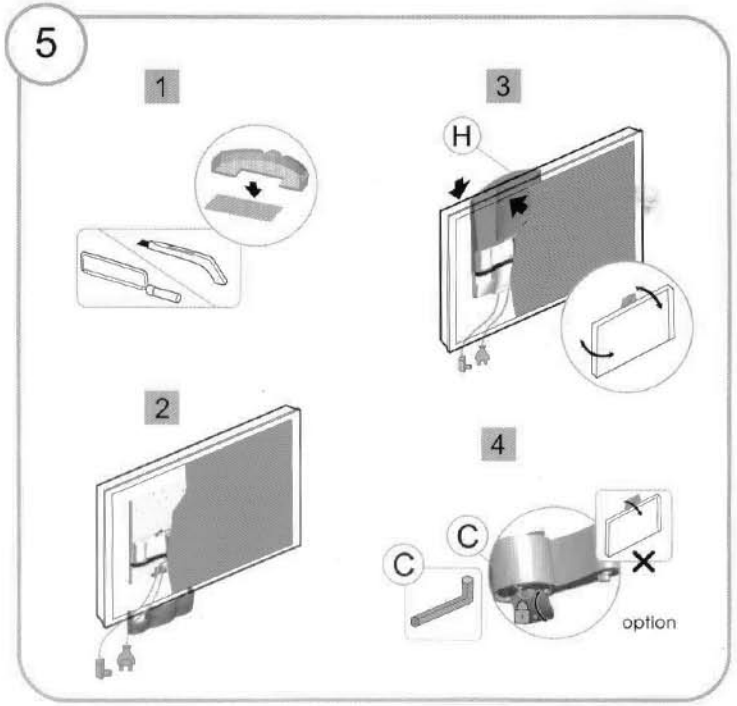

MUST BE FITTED BY A PROSSIONAL